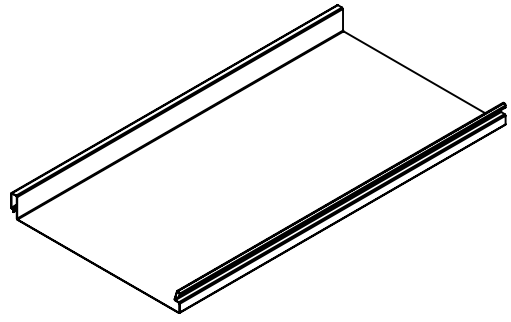

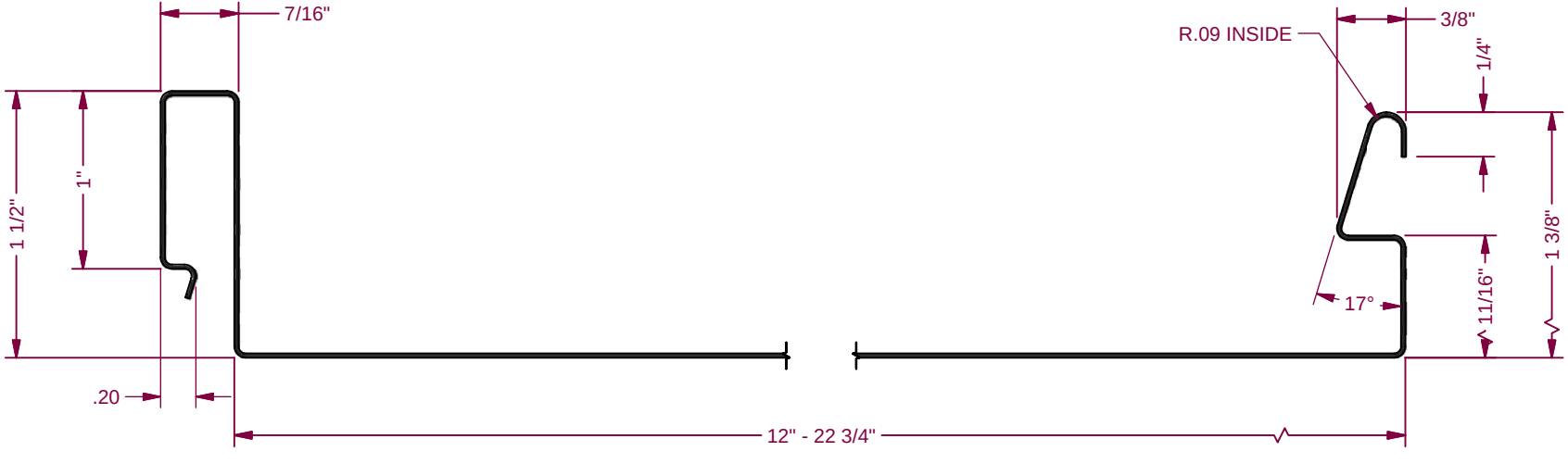
7/16"
1 1/2"
1"
.20
12" - 22 3/4"
R.09 INSIDE
3/8"
1/4"
1 3/8"
11/16"
17°